POLITECHNIKA GDAŃSKA
WYDZIAŁ CHEMICZNY

RENEWABLE ENERGY SOURCES LABORATORY
Department of Chemical Apparatus and Theory of Machines
Faculty of Chemistry, Gdańsk University of Technology

LABORATORY INSTRUCTION NO. 9-OS b

STUDYING THE INFLUENCE OF EXTERNAL FACTORS ON SOLAR CELL CHARACTERISTIC

1. Purpose & range of the exercise

The exercise aims to familiarize students with the following topics:

- Influence of variable lighting & temperature conditions on photovoltaic cell's electric work parameters.
- Measuring the current-voltage characteristic of photovoltaic cells
- Calculating electric parameters of photovoltaic cells in constant lighting conditions.
- Loss of power caused by shading the photosensitive surface.

2. Scope of exercise

Radiation intensity has crucial influence on the *I(U)* characteristic curve plot, and maximum power (Fig. 1.).

Short-circuit current value increases in direct proportion to an increase in illumination intensity.

Photovoltaic conversion efficiency is calculated based upon the current--voltage characteristic, determined in constant lighting conditions from the formula:

$\eta = P_{MMP}/E \cdot S$, where E - irradiance [W/m^2], S - cell/module surface area.

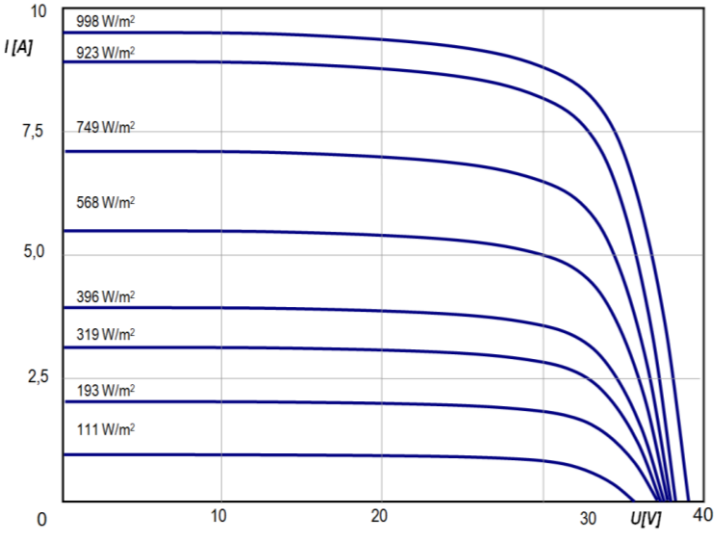

Fig. 1. Current-voltage characteristics of a solar installation in various irradiance conditions

Surface of monocrystalline silicon photovoltaic cells allows for almost 90% absorption of radiation and highest photovoltaic conversion efficiency among all silicon cells.

Cell & module working temperature depends on solar radiation intensity, wind velocity, air temperature and thermal properties of installation components. Module temperature may reach more than 70°C even at 750 W/m^2 of solar radiation intensity. 30°C is reached in a typical building-integrated PV system, mounted on the roof, even at air temperature level of 10,9°C and solar intensity level of 381 W/m^2.

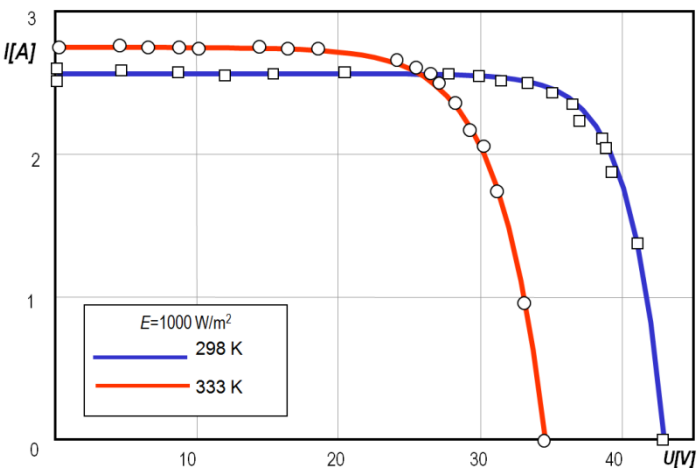

Decrease of efficiency of solar cells/modules in high temperatures is mainly caused by a decrease in open-circuit voltage (Fig. 2.).

Minor increase in short-circuit current does not compensate this decrease and, as a result of cell temperature rise, generated power and photovoltaic conversion efficiency both decrease.

Fig. 2. Influence of cell temperature on photovoltaic module current-voltage characteristic

In non-uniform module insolation conditions, temperature of a shaded cell may rise to such a level, that it causes damage and an overheated point is formed (so-called *hot spot*).
The cause of such a phenomenon is inverted current flow through the shaded cell.
Partial module/installation shading may be caused by natural conditions, such as clouds, trees, chimneys, neighboring building or lingering snow cover.

In a case where shade covers as little as 2% of module area (e.g. ¾ of a single cell area in a module containing 36 cells), maximum power decreases by 70%.

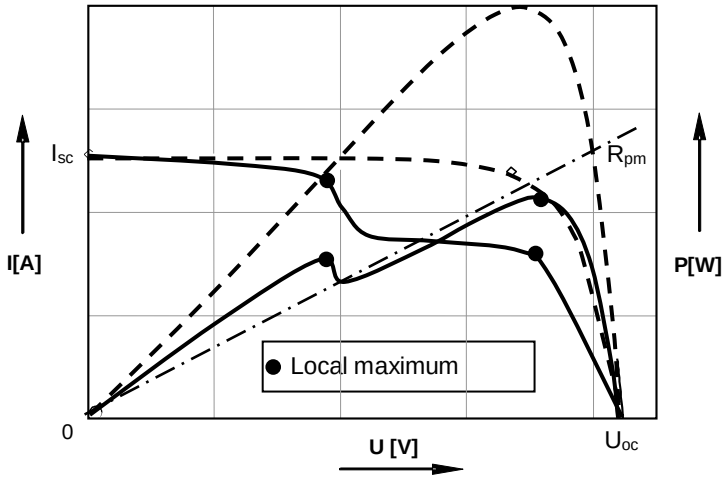

Fig. 3. *I–U* and *I–P* characteristic of a photovoltaic module in uniform and non-uniform lighting conditions

Set of experiments for the study:

A. Measuring *I-U* characteristics in various lighting conditions. Power and optimal work point as a function of light intensity.

B. Measuring *I-U* characteristic at various solar cell work temperatures. Power and optimal work point of a PV system as a function of cell temperature

C. Measuring *I-U* characteristics of shaded cells.

3. Description of the experimental station

Light intensity, temperature and electrical load have direct influence on photovoltaic cell's electrical parameters.

A lighting system, allowing intensity regulation, lights four solar cells. The cell's temperature is kept at a constant level with a Peltier module.

The provided set of cables and a switchboard are used to connect the cells in a series or in parallel. Variable load electrical resistor, built into the switchboard, enables manual calculation, based on the measured current--voltage characteristic curve. A diode can be attached parallel to every cell, in order to study the effects of shading.

Measurements of the characteristic curve may be automated with a built-in current release system, controlled with software and allowing constant modifications of the electric load. A system of software-operated sensors is used to measure light intensity, current, voltage and temperature.

3A. Lighting

The lighting unit contains 16 singular halogen lamps, used for illuminating the solar cells. Lighting intensity can be regulated through software, by setting a specific value, expressed in [W/m^2]. After setting the value, regulate the lamp's intensity with the lighting unit's power supply, until it reaches desirable intensity level. Light intensity can be regulated within the range of 200 W/m^2-800 W/m^2. If achieving desired value is impossible, an error message will be displayed.

3B. Solar cells

The system contains four monocrystalline solar cells. Front and back of the cells have been connected with a tin-coated copper tape. Cables leading to the switchboard have been attached to the cells' electrical contacts.

A reference solar cell has been mounted between the cells. Its purpose is to measure light intensity. The measured value controls the lamp's intensity.

Heat-conducting assembly base provides heat conductivity between solar cells and the heating/cooling Peltier module, which is used to heat or cool down the solar cells, depending on the temperature set.

3C. Switchboard

The switchboard allows for various connections, using the provided set of cables. Red and blue cables in different lengths, as well as short-circuit plugs are available.

Cables leading to the switchboard have been attached to every cell's front and back contacts.

3D. Measuring & control unit with automatic current release

The relay box contains all main components used for measuring and data recording. There's no need to open the box during work.

Measurement is possible only after connecting via USB to the computer, on which suitable software has been installed. Unit's main switch, as well as the switches for lighting unit and Peltier module are placed in front of the relay box. These can be turned on only once, after launching the software used to control all device functions.

3E. Software

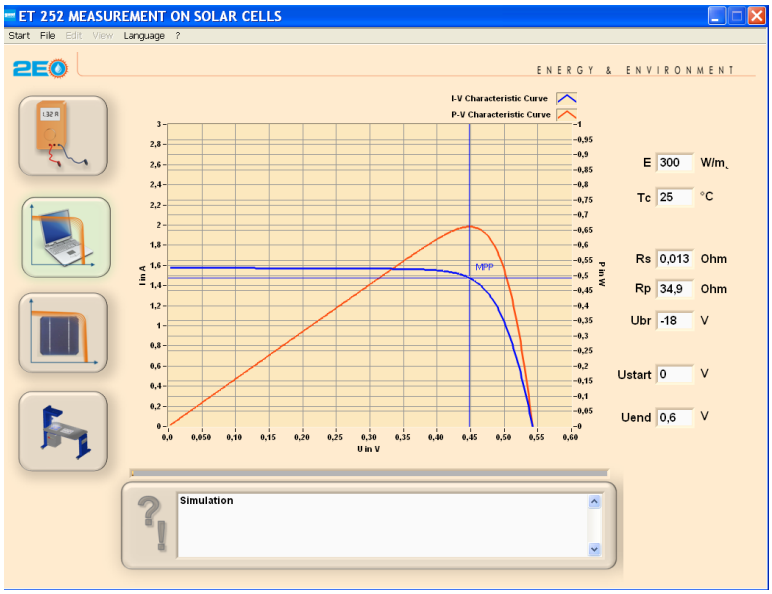

The software allows for reading and observing the graphs, as well as conducting the simulation. Icons for switching software functions:

Multimeter - measured values

Simulation

***I-U* and *P-U* characteristic graph**

Exercise module activation switch

4. The course of exercise

A. Measuring *I-U* characteristics in various lighting conditions. Power and optimal work point as a function of light intensity.

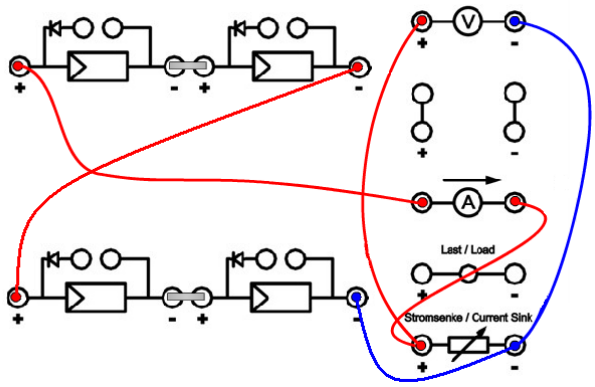

C1. Perform all cable connection for automatic measurement on 4 series-connected solar cells.

C2. Set the lighting to 200 W/m^2 and temperature to 25°C.

C3. Observe the current-voltage characteristic curve. After clicking on the Graph Characteristic icon (3rd from the top), and repeat the measurement for 400 W/m^2 and 600 W/m^2. Save data in appropriately-named files (file → save graph), e.g. IU_series_4_200.dat.

After finishing the automatic measurement, measure U_{oc} and I_{sc} in manual mode (according to A4) for 200 W/m^2, 400 W/m^2 and 600 W/m^2.

Figure illustrates measurement results for short-circuit current as a function of voltage.

When the exercise is finished, copy the obtained results from .dat file into EXCEL software and create a point graph illustrating the current-voltage characteristic curves.

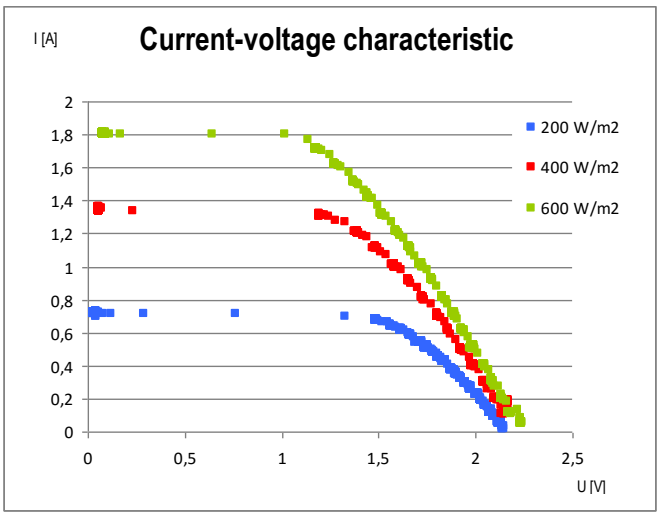

Short-circuit current is approximately proportional to the illumination.
Open-circuit voltage is less dependent on illumination.

C4. Analyze the results and calculate maximum power, as well as the characteristic's fill factor for various light intensity values.

	200 W/m^2	400 W/m^2	600 W/m^2
Open-circuit voltage [V]	2.15	2.2	2.22
Short-circuit current [A]	0.71	1.37	1.83
Maximum power [W]	1.03	1.7	2.12
Fill factor [%]	67	56	52

C5. Formulate conclusions.
The table shows that the fill factor decreases with the increase of light intensity. This effect can be explained with the growing influence of serial resistor.

B. Measuring *I-U* characteristic at various solar cell work temperatures. Power and optimal work point of a PV system as a function of cell temperature

Press the multimeter icon (1st from the top).

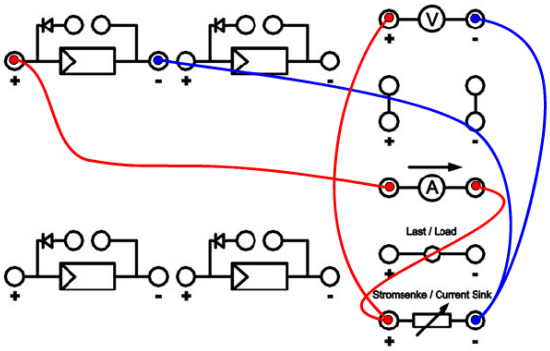

D1. Perform all the connections according to the figure.
Set the lighting to 1000 W/m^2 and temperature to 60°C.
Wait until the temperature reaches 55°C.

D2. Decrease light intensity to 250 W/m^2 and record the first *I-U* characteristic curve after exposing the solar cell to the temperature of 55°C, for about 5 minutes.

D3. Decrease the temperature setting by 5°C.

D4. Record the following *I-U* characteristic no sooner than 2 minutes after reaching the new setting.

After finishing the automatic measurement, measure U_{oc} and I_{sc} in manual mode (according to A4) for every temperature.

D5. Repeat D3 and D4 until a temperature of 25°C is reached.
Save data in appropriately-named files (file → save graph), e.g. IU_55.

When the exercise is finished, copy the obtained results from .dat file into EXCEL software and create a point graph illustrating the current--voltage characteristic curves.

D6. Present the results on graphs.

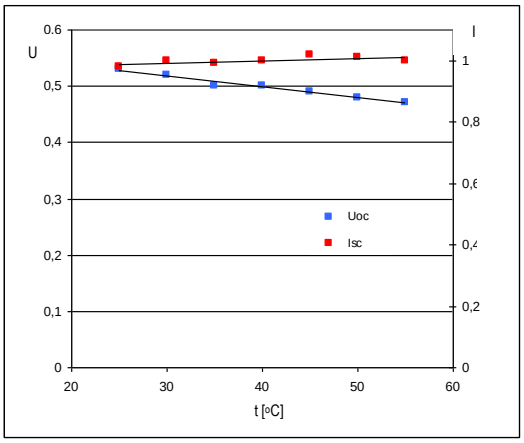

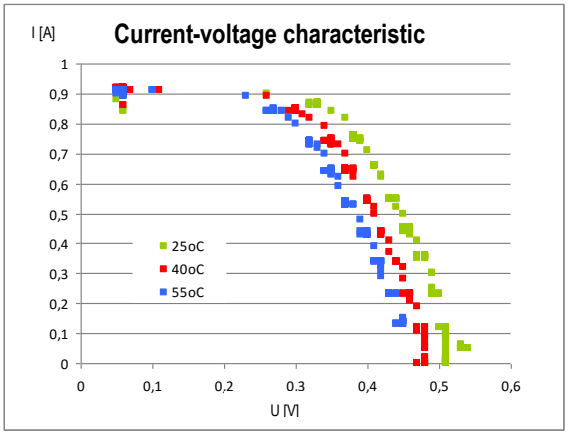

Conclusion: A minor increase in short-circuit current and a major decrease in open-circuit voltage is observed.

D7. In order to illustrate the dependence of solar cell's maximum power *PMPP* on temperature, plot the percentile loss of power as a function of temperature. Assume the cell's power in 25°C as 100% (reference value).

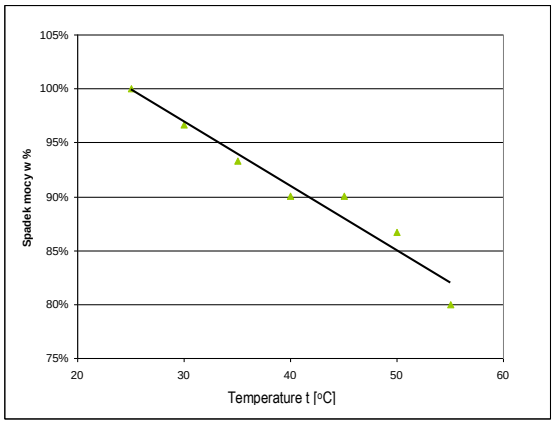

D8. Calculate the linear temperature coefficient of maximum output power [%/K], e.g.:

$$\frac{1}{P_{\max}} \cdot \frac{dP_{\max}}{dT} = -0.65 \frac{\%}{K}$$

C. Measuring *I-U* characteristics of shaded cells.

E1. Connect 4 solar cells in a series and activate all bypass diodes by inserting the short-circuit plug.

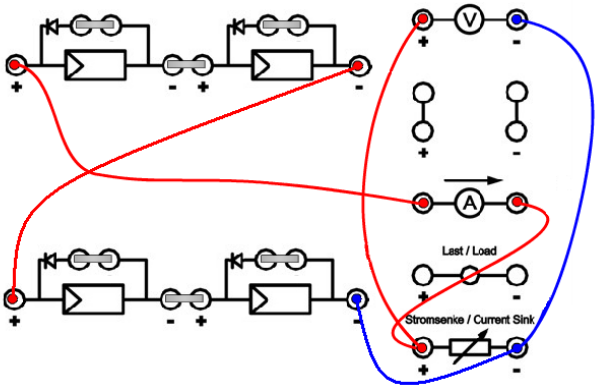

E2. Set the Peltier module temperature to 25°C. Set lighting intensity to 200 W/m^2.
E3. Save the *I-U* characteristic curve for unshaded cells (file → save graph).

E4. Repeat the measurement after removing a short-circuit plug, which deactivates one of the bypass diodes.

E5. Mount the smallest cover on the cell, for which the bypass diode was previously deactivated on the switchboard. The shading should cover approx. ¼ of the cell's surface.

E6. Save the obtained *I-U* characteristic curve.

E7. Repeat E5 and E6, using larger cover to shade ½ and ¾ of the cell's surface.

E8. Reconnect the bypass diode connection cable. Repeat E5 and E7 with the bypass diode connected.

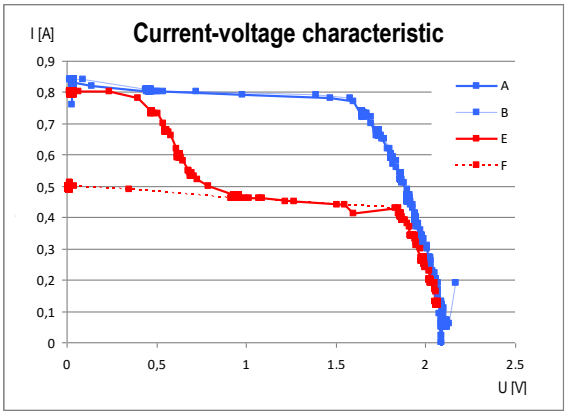

A -*I-U* characteristic curve with bypass diode, no shading
B -*I-U* characteristic curve without bypass diode, no shading
E -*I-U* characteristic curve with bypass diode, 1/2 of cell surface shaded
F -*I-U* characteristic curve without bypass diode, 1/2 of cell surface shaded

E9. Save data in appropriately-named files (file → save graph), e.g). After finishing the automatic measurement, measure U_{oc} and I_{sc} in manual mode (according to A4)

Copy the obtained results from .dat file into EXCEL software and create a point graph illustrating the current--voltage characteristic curves.

Create *I-U* curves for different shading levels.

Conclusion: the influence of shading half of the cell's surface can be observed in characteristic curves E and F. Bypass diode prevents the influence of an inverted-direction current on the shaded cell.

E10. Plot the curves illustrating the dependence of power on voltage, at various shading levels.

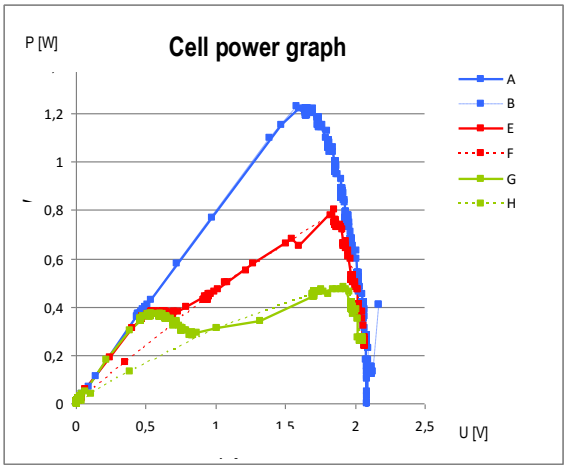

A *P-U* characteristic curve with bypass diode, no shading
B - *P-U* characteristic curve without bypass diode, no shading
E - *P-U* characteristic curve with bypass diode, 1/2 of cell surface shaded
F - *P-U* characteristic curve without bypass diode, 1/2 of cell surface shaded
G - *P-U* characteristic curve with bypass diode, 3/4 of cell surface shaded
H - *P-U* characteristic curve without bypass diode, 3/4 of cell surface shaded

Conclusions: as the shading level increases, loss of electric power is observed

In actual photovoltaic systems, tracing the maximum power point MPP is required to distinguish main maximum power from the existing local maximum powers on the obtained characteristic curve.

5. Literature:

[1] Ewa Klugmann-Radziemska, Fotowoltaika w teorii i Praktyce, Wydawnictwo BTC, Warszawa-Legionowo 2009

[2] Ewa Klugmann-Radziemska, Odnawialne źródła energii - przykłady obliczeniowe, Wydanie V, Wydawnictwo Politechniki Gdańskiej 2015

[3] ET 252 Pomiary na ogniwach słonecznych, G.U.N.T. Gerätebau, Barsbüttel, Germany 2015